TEST REPORT

Kunde: *Client:*	Shanghai Panelmate Electronics Co., Ltd
Adresse: *Address:*	Building 18th, No.177 Fulian 2nd Rd. Baoshan District, Shanghai, 201906
Hersteller: *Manufacturer:*	Shanghai Panelmate Electronics Co., Ltd
Adresse: *Address:*	Building 18th, No.177 Fulian 2nd Rd. Baoshan District, Shanghai, 201906
Name der Marke: *Brand Name:*	Panelmate
Beschreibungdes Produkts: *Product Description:*	Industrial Operation Panel PC
Modelle: *Models:*	See model list
Bewertung: *Rating:*	See model list
Verfahren: *Method:*	IEC 60529:1989+A1:1999+A2:2013
Prüfergebnis*: *Test result*:*	Pass

Datum der Prüfung: *Date of Test:*	**Datum der Emission:** *Date of Issue:*	**Klassifizierung:** *Classification:*	**Gegenstand der Prüfung:** *Test item:*
2024/06/26	2024/06/27	Commission Test	IP65 Test

Prüflabor (Testlabor) / Testing Laboratory:
Shenzhen Southern LCS Compliance Testing Laboratory Ltd.
01-201, No.39 Building, Xialang Industrial Zone, Heshuikou Community, Matian Street, Guangming District, Shenzhen, China

Test von/Test by:	**Check von**/Check by:	**Genehmigt von**/Approved by:
Rose Cao	Torres He	Jesse
Rose Cao/ Project Engineer	Torres He/ Director	Jesse Liu/ Manager

Dieser Prüfbericht bezieht sich nur auf das o.g. Prüfmuster und darf ohne Genehmigung der Prüfstelle nicht auszugsweise vervielfältigt werden. Dieser Bericht berechtigt nicht zur Verwendung eines Prüfzeichens.

Remark: The duplication of this report or parts of it and its use for advertising purposes is only allowed with permission of the testing laboratory.This report contains the result of examination of the product sample submitted by the applicant. A general statement concerning the quality of the products from the series manufacturer cannot be derived therefore.

General remarks:

1. The test results presented in this report relate only to the object tested.
2. This report shall not be reproduced, except in full, without the written approval of the Issuing Testing Laboratory. The authenticity of this Test Report and its contents can be verified by contacting the Testing Laboratory, responsible for this Test Report.
3. The general information of applicant and manufacturer (such as the name and address), product name, model/type reference, trademark and other similar information contained in this report are all provided by the applicant, the laboratory is not responsible for verifying its authenticity.

Modified Information

Version	Report No.	Revision Date	Summary
--	LCSB05234001S	/	Original Version

General product information:

- All models have the same structure except model name.
- Unless otherwise specified, the model IPC59150 was chosen as representative model to perform all test.

Model list:

Model	Rating
IPC59150	DC24V, 5A
IPC52150-XXXX	
IPC59150-XXXX	
IPC52156-XXXX	
IPC52185-XXXX	
IPC52190-XXXX	
IPC59190-XXXX	
IPC52215-XXXX	
IPC59215-XXXX	

Equipment used during test:

ID Number	Instrument	Model/ Type	Calibration Date
SLCS-S-031	Sand and dust test box	SG-500	2024/5/6
SLCS-S-095	Test needle(1mm)	AGPCD	2024/5/7
SLCS-S-034	IPX5, IPX6 waterproof equipment	JL-1/2	2024/5/6
SLCS-E-027	Temperature and humidity barometer	/	2024/4/24
SLCS-S-011	J Thermocouple	J	2023/11/2
SLCS-S-029	Temperature recorder	34970A	2024/5/7

Test Item:

Dust test for first characteristic numerals 6.

Atmospheric conditions for water or dust tests:

Air pressure: 86 kPa to 106 kPa

Temperature range: 15°C to 35°C

Relative humidity: 25 %RH to 75 %RH

Test samples:

Clean and new sample were be tested

Test Method:

The test is made using a dust chamber incorporating the basic principles shown in figure 2 whereby the powder circulation pump may be replaced by other means suitable to maintain the talcum powder in suspension in a closed test chamber. The talcum powder used shall be able to pass through a square-meshed sieve the nominal wire diameter of which is 50 um and the nominal width of a gap between wires 75 um. The amount of talcum powder to be used is 2 kg per cubic metre of the test chamber volume. It shall not have been used for more than 20 tests.

Enclosures are of necessity in one of two categories: Category 1: Enclosures where the normal working cycle of the equipment causes reductions in air pressure within the enclosure below that of the surrounding air, e.g., due to thermal cycling effects. Category 2: Enclosures where no pressure difference relative to the surrounding air is present.

Category 1 enclosures:

The enclosure under test is supported inside the test chamber and the pressure inside the enclosure is maintained below the surrounding atmospheric pressure by a vacuum pump.

The suction connection shall be made to a hole specially provided for this test. If not otherwise specified in the relevant product standard, this hole shall be in the vicinity of the vulnerable parts If it is impracticable to make a special hole, the suction connection shall be made to the cable inlet hole. If there are other holes (for example, more cable inlet holes or drain-holes) these shall be treated as intended for normal use on site.

The object of the test is to draw into the enclosure, by means of depression, a volume of air 80 times the volume of the sample enclosure tested without exceeding the extraction rate of 60 volumes per hour. In no event shall the depression exceed 2 kPa (20 mbar) on the manometer shown in figure 2.

If an extraction rate of 40 to 60 volumes per hour is obtained the duration of the test is 2 h.

If, with a maximum depression of 2 kPa (20 mbar), the extraction rate is less than 40 volumes per hour, the test is continued until 80 volumes have been drawn through, or a period of 8 h has elapsed.

Category 2 enclosures

The enclosure under test is supported in its normal operating position inside the test chamber, but is not connected to a vacuum pump. Any drain-hole normally open shall be left open for the duration of the test. The test shall be continued for a period of 8 h.

Acceptance Conditions:

The protection is satisfactory if no deposit of dust is observable inside the enclosure at the end of the test.

The protection is satisfactory if the test wire of 1,0 mm φ shall not penetrate and adequate clearance shall be kept.

Test Result:

☒ **Pass** ☐ **Fail**

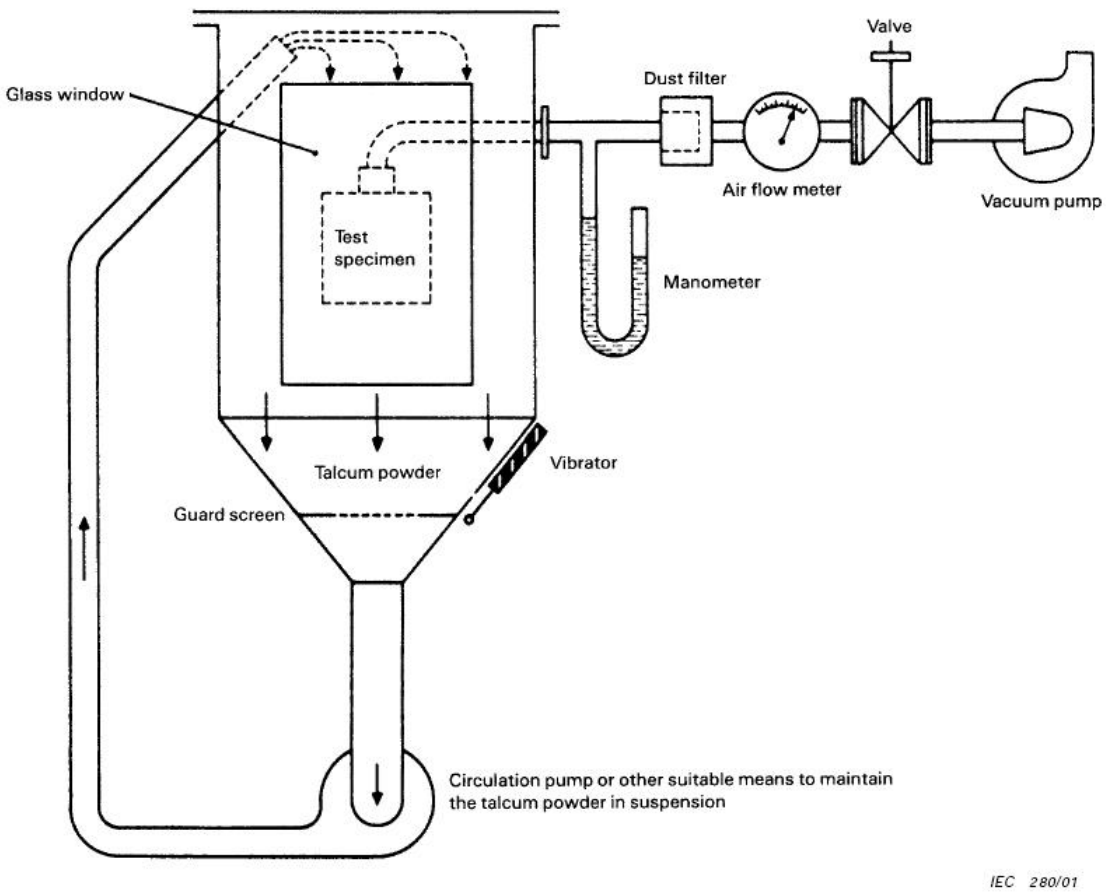

NOTE See IEC 60068-2-68, figure 2 valid for La2 only.

Figure 2 – Test device to verify protection against dust (dust chamber)

Test wire 1,0 mm diameter, 100 mm long

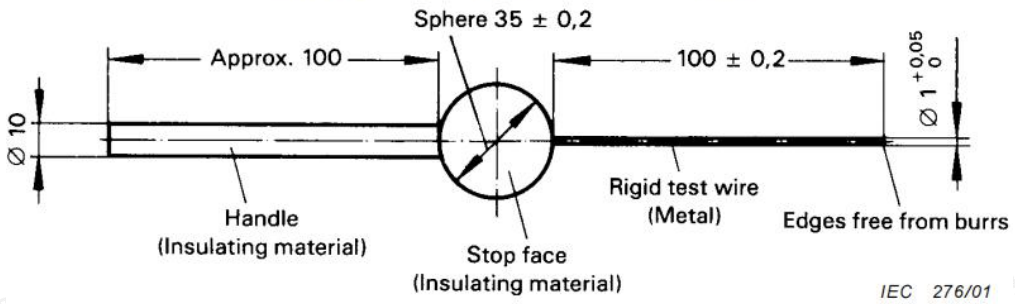

Test Item:

Test for second characteristic numeral 5 with the 6,3 mm nozzle

Atmospheric conditions for water or dust tests:

Air pressure: 86 kPa to 106 kPa

Temperature range: 15°C to 35°C

Relative humidity:25 %RH to 75 %RH

Test samples:

Clean and new sample were be tested

Test Method:

The test is made by spraying the enclosure from all practicable directions with a stream of water from a standard test nozzle as shown in figure 6.

The conditions to be observed are as follows:

– internal diameter of the nozzle: 6,3 mm;

– delivery rate: 12,5 l/min ± 5 %;

– water pressure: to be adjusted to achieve the specified delivery rate;

– core of the substantial stream: circle of approximately 40 mm diameter at 2,5 m distance from nozzle;

– test duration per square metre of enclosure surface area likely to be sprayed: 1 min;

– minimum test duration: 3 min;

– distance from nozzle to enclosure surface: between 2,5 m and 3 m.

Acceptance Conditions:

It is the responsibility of the relevant Technical Committee to specify the amount of water which may be allowed to enter the enclosure and the details of a dielectric strength test, if any. In general, if any water has entered, it shall not:

--be sufficient to interfere with the correct operation of the equipment or impair safety;

--deposit on insulation parts where it could lead to tracking along the creepage distances;

--reach live parts or windings not designed to operate when wet;

--accumulate near the cable end or enter the cable if any.

If the enclosure is provided with drain-holes, it should be proved by inspection that any water which enters does not accumulate and that it drains away without doing any harm to the equipment.

For enclosures without drain-holes, the relevant product standard shall specify the acceptance conditions if wate r can accumulate to reach live parts.

Test Result:

☒ **Pass** ☐ **Fail**

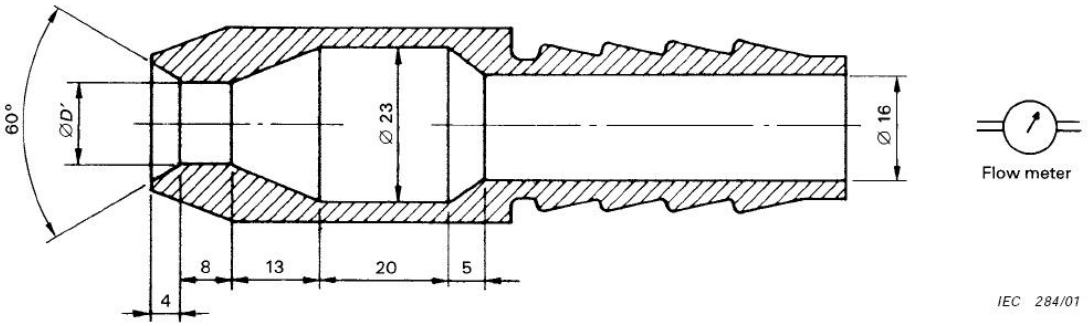

Dimensions in millimetres

D' = 6,3 for the test of 14.2.5 (second characteristic numeral 5)
D' = 12,5 for the test of 14.2.6 (second characteristic numeral 6)

Figure 6 – Test device to verify protection against water jets (hose nozzle)

Photo Documentation:

Photo 1: Overall view of model IPC59150

Photo 2: Overall view of model IPC59150

Photo Documentation:

Photo 3: IP6X test of model IPC59150

Photo Documentation:

Photo 4: IPX5 test of model IPC59150

Photo Documentation:

Photo 5: Test result of IP6X and IPX5 test

Photo 6: Test result of IP6X and IPX5 test

----- End of Test Report-----